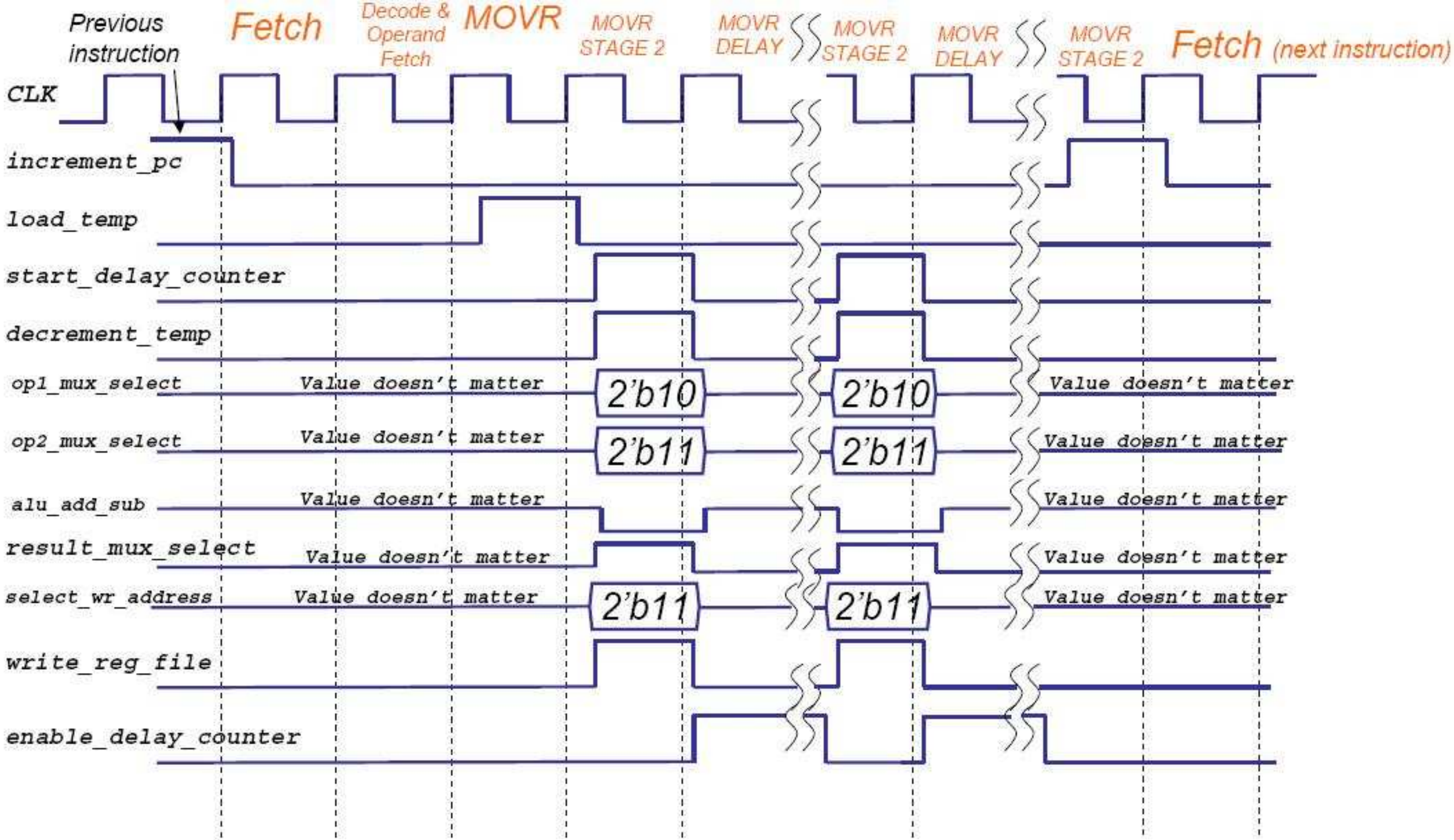
Previous instruction
Fetch
Decode & Operand Fetch
MOVR
MOVR STAGE 2
MOVR DELAY
MOVR STAGE 2
MOVR DELAY
MOVR STAGE 2
Fetch (next instruction)
CLK
increment_pc
load_temp
start_delay_counter
decrement_temp
op1_mux_select
Value doesn't matter
2'b10
2'b10
Value doesn't matter
op2_mux_select
Value doesn't matter
2'b11
2'b11
Value doesn't matter
alu_add_sub
Value doesn't matter
Value doesn't matter
result_mux_select
Value doesn't matter
Value doesn't matter
select_wr_address
Value doesn't matter
2'b11
2'b11
Value doesn't matter
write_reg_file
enable_delay_counter